This information provided by:

Gross Automation
www.grossautomation.com

Call Toll Free:
**800-349-5827**

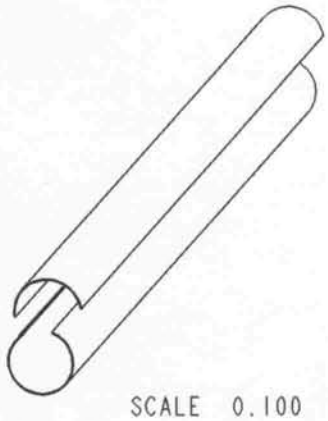

SCALE 0.100

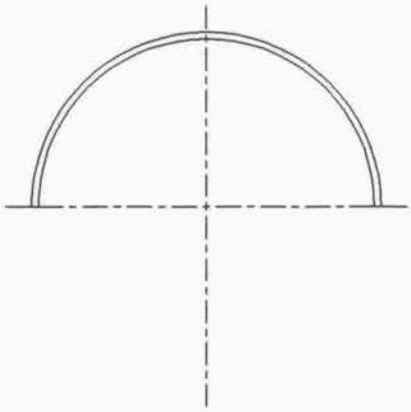

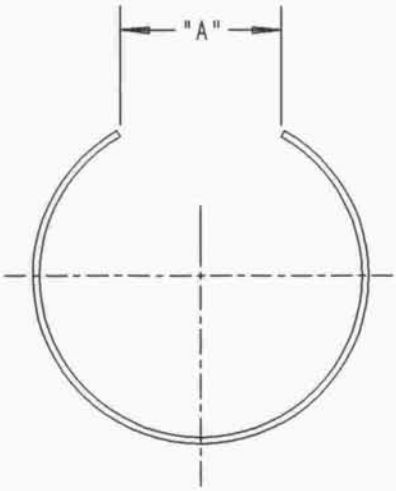


| PIPE SIZE | PART NO. | DIM. A |
|---|---|---|
| 5" | 487160RD-010 | 2.67 |
| 4" | 487150RD-010 | 2.16 |
| 3" | 487130RD-010 | 1.68 |

| | | | |
|---|---|---|---|
| TITLE: OVERLAPPING REPAIR DUCT ASSEMBLY - 10'-0" | DRN. DPR DATE 8-31-04 | PART NO: SEE CHART | |
| LAMSON & SESSIONS — ALL DRAWINGS ARE THE PROPERTY OF LAMSON & SESSIONS AND SHALL NOT BE REPRODUCED IN ANY FORM WITHOUT LAMSON & SESSIONS' APPROVAL AND ARE TO BE PROMPTLY RETURNED UPON REQUEST. | APP. WGL DATE 9-2-04 | DRAWING NO: AC04610 | REV. |

Gross Automation (877) 268-3700 · www.carlonsales.com · sales@grossautomation.com