This information provided by:

Gross Automation
www.grossautomation.com

Call Toll Free:
800-349-5827

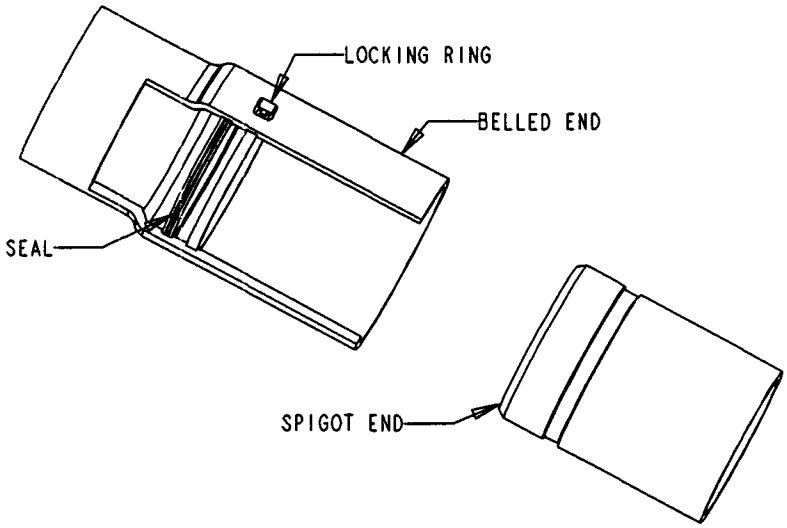

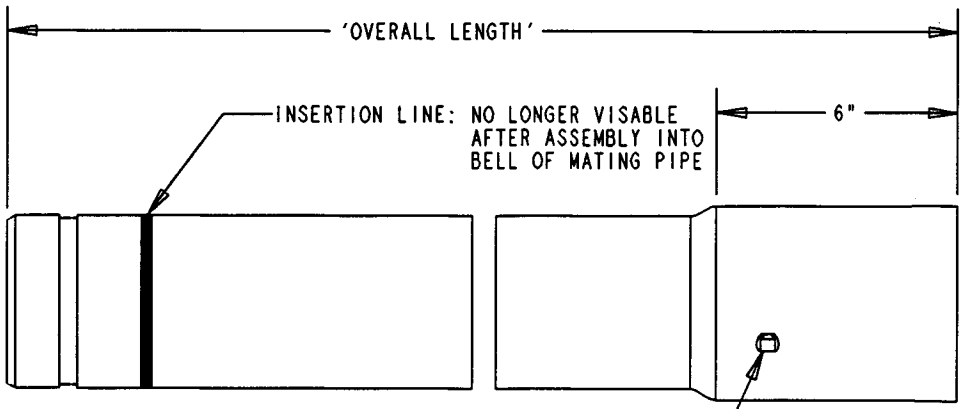

INSERT LOCKING RING AFTER THE INSERTION OF THE SPIGOT END OF MATING PIPE TO LOCK INTO POSITION

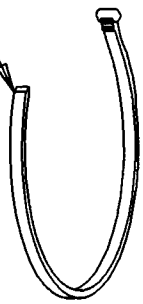

LOCKING RING

PART NUMBER	OVERALL LENGTH	SCH. 40 PVC	PLUS 80 PVC	COLOR
BG480SP-020	20'	4"	GREY	-
BG480SP-010	10'	4"	GREY	-
BG640RD-020	20'	6"	-	RED
BG640RD-010	10'	6"	-	RED
BG640SP-020	20'	6"	-	GREY
BG640SP-010	10'	6"	-	GREY
BG540RD-020	20'	5"	-	RED
BG540RD-010	10'	5"	-	RED
BG540SP-020	20'	5"	-	GREY
BG540SP-010	10'	5"	-	GREY
BG440SP-020	20'	4"	-	GREY
BG440SP-010	10'	4"	-	GREY
BG440RD-020	20'	4"	-	RED
BG440RD-010	10'	4"	-	RED
BG340RD-020	20'	3"	-	RED
BG340RD-010	10'	3"	-	RED
BG340SP-020	20'	3"	-	GREY
BG340SP-010	10'	3"	-	GREY

TITLE: BORE-GARD ASSEMBLY	DRN. DJK DATE 2-12-98	PART NO.: SEE CHART	
LAMSON & SESSIONS	APP. PRM DATE 2-12-98	DRAWING NO.: AC03340	REV. F

ALL DRAWINGS ARE THE PROPERTY OF LAMSON & SESSIONS AND SHALL NOT BE REPRODUCED IN ANY FORM WITHOUT LAMSON & SESSIONS' APPROVAL AND ARE TO BE PROMPTLY RETURNED UPON REQUEST.

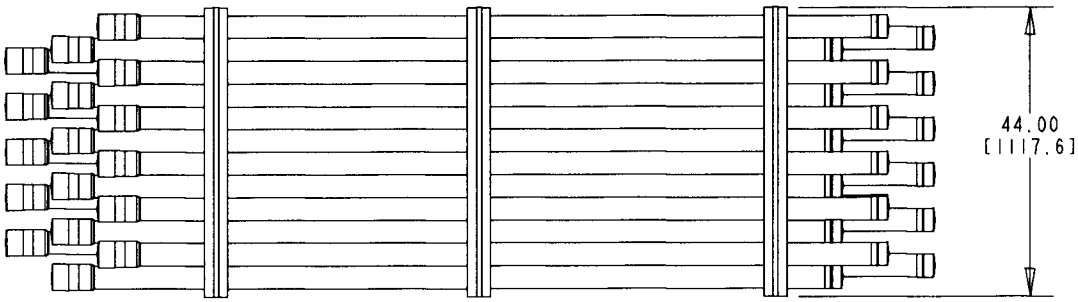

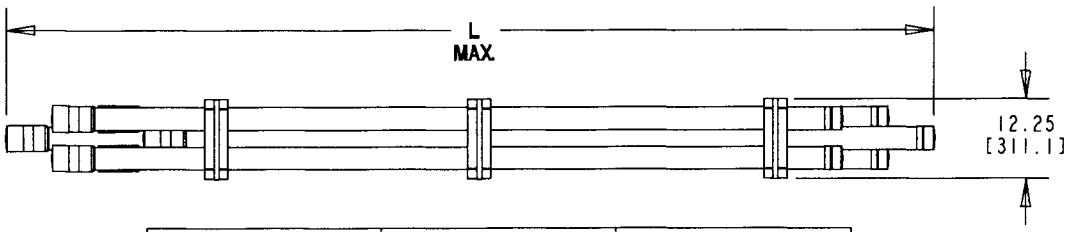

PART NUMBER	L LENGTH	WEIGHT LBS/Kg
BG340SP-010	150.0[3810]	575/261
BG340SP-020	270.0[6858]	1150/522
BG340RD-010	150.0[3810]	575/261
BG340RD-020	270.0[6858]	1150/522

NOTES:

1. QUANTITY OF ONE BUNDLE: 35 PIECES
   - BG340SP/RD-010 350'[106.7M]
   - BG340SP/RD-020 700'[213.3M]

2. TRUCK LOAD QUANTITY = 19,600'[5973.8M]
   - 56 BUNDLES STACKED 7 HIGH FOR P/N BG340SP/RD-010
   - 28 BUNDLES STACKED 7 HIGH FOR P/N BG340SP/RD-020

3. ALL DIMENSIONS ARE INCH/MILLIMETERS UNLESS OTHERWISE SPECIFIED.

4. EACH BUNDLE HAS THREE ROWS STAGGERED AS SHOWN:
   TOP ROW - 12 PIECES OF PIPE
   MIDDLE ROW - 11 PIECES OF PIPE
   BOTTOM ROW - 12 PIECES OF PIPE

5. ALL BELLS ARE TO BE PLACED AT ONE END.

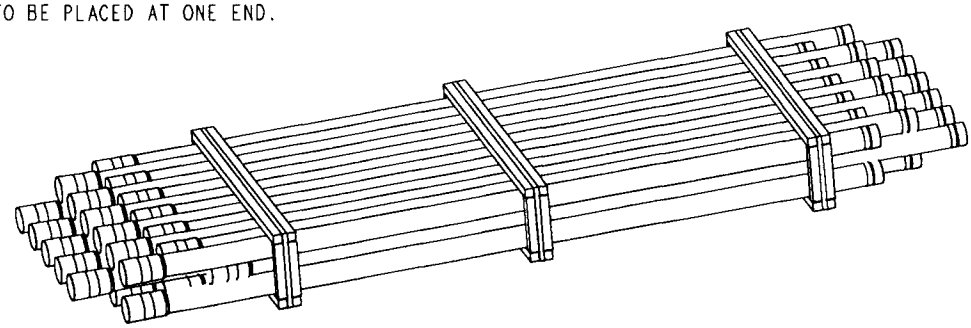

TITLE: 3" BORE-GARD PACKAGING		DRN. DPR	DATE 6-6-00	PART NO.: BG340SP-010 & BG340SP-020	
LAMSON & SESSIONS	ALL DRAWINGS ARE THE PROPERTY OF LAMSON & SESSIONS AND SHALL NOT BE REPRODUCED IN ANY FORM WITHOUT LAMSON & SESSIONS' APPROVAL AND ARE TO BE PROMPTLY RETURNED UPON REQUEST.	APP. CHR	DATE 6-12-00	DRAWING NO.: AC03787	REV. A

Gross Automation (877) 268-3700 · www.carlonsales.com · sales@grossautomation.com